Work Order ID 73791

Thursday, September 15, 2011 10:36:32 AM

Item ID: D2654-1
Revision ID:
Item Name: Web
Start Date: 9/15/2011 **Start Qty:** 10.00
Required Date: 10/7/2011 **Req'd Qty:** 10.00
Reference:

Accept

Setup Start
Stop

Cust Item ID:
Customer:

Run Start
Stop

Approvals: **Process Plan:** W **Date:** _____ **Tooling:** _____ **Date:** _____
QC: _____ **Date:** _____ **SPC (Y/N):** _____ **Date:** _____

Sequence ID/ Work Center ID	Operation Description	Set Up/ Run Hours	Tool ID	Tool #	Plan Code	Accept Qty	Reject Qty	Reject Number	Insp. Stamp
Draw Nbr	**Revision Nbr**								
D2654	Rev E1								
100	Skidtubes	0.00							
Skidtubes	**Memo**	0.00							
Skidtubes	1-Cut D2600-5 to length as per Dwg D2654 (73.85") 2-Drill pilot holes in web using drill jig DT 8018-1 as per Dwg D2654 3-Using the uni-bit, open holes to finish size as per Dwg D2654 4-Deburr holes and ends					DC/BB 11/10/13			
110	QC5- Inspect part completeness to step on W/O	0.00				10	0	BE 11/10/13	
QC	**Memo**	0.00							
Quality Control									
120	Chemical Conversion Coat per QSI005 4.1	0.00							
HandFinish	**Memo**	0.00				DC BB 11/10/13			
Hand Finishing									

PTO

Dart Aerospace Ltd

W/O: 73791 ~~[illegible]~~

WORK ORDER CHANGES

DATE	STEP	PROCEDURE CHANGE	By	Date	Qty	Approval Chief Eng / Prod Mgr	Approval QC Inspector

Part No: D2654-1 PAR #: N/A Fault Category: Landing Gear Finishing NCR: Yes No DQA: # Date: 11.10.18

Resolution: Scrap Disposition: Scrap QA: N/C Closed: CL Date: 11/10/18

NCR: 11-905

WORK ORDER NON-CONFORMANCE (NCR)

44.14 x 2 = 89.48

DATE	STEP	Description of NC Section A	Corrective Action Section B: Initial Chief Eng	Action Description Chief Eng	Sign & Date	Verification Section C	Approval Chief Eng	Approval QC Inspector
11-10-14	120	Employee Forgot 2 pcs. in acid Tank overnight. RC; Lack of attention	11.10.14	Scrap/Destroy 2pcs. - Record on JB transi Sheet	11/10/14	11-10-14	11.10.14	11.10.14

NOTE: Date & initial all entries

H:\fFORMS\Quality Assurance\approved QA\NCRWO RevE

Work Order ID 73791

Thursday, September 15, 2011 10:36:32 AM

Item ID: D2654-1
Revision ID:
Item Name: Web
Start Date: 9/15/2011 **Start Qty:** 10.00
Required Date: 10/7/2011 **Req'd Qty:** 10.00
Reference:

Accept

Setup Start
Stop

Cust Item ID:
Customer:

Run Start
Stop

Approvals: **Process Plan:** _____ **Date:** _____ **Tooling:** _____ **Date:** _____
QC: _____ **Date:** _____ **SPC (Y/N):** _____ **Date:** _____

Sequence ID/ Work Center ID	Operation Description	Set Up/ Run Hours	Tool ID	Tool #	Plan Code	Accept Qty	Reject Qty	Reject Number	Insp. Stamp
130 QC Quality Control	QC3- Inspect Part Finish	0.00							DP 11-10-14 (8)
	Memo	0.00							
140 Packaging Packaging	Identify as per dwg & Stock Location: LG	0.00				DL 11/10/14			(8) See PTC
	Memo	0.00							
150 QC Quality Control	QC21- Final Inspection - Work Order Release	0.00						11/10/17	
	Memo	0.00							MF 11-10-14

Dart Aerospace Ltd

W/O:		WORK ORDER CHANGES					
DATE	STEP	PROCEDURE CHANGE	By	Date	Qty	Approval Chief Eng / Prod Mgr	Approval QC Inspector

Part No: _____ **PAR #:** _____ **Fault Category:** _____ **NCR:** Yes No **DQA:** _____ **Date:** _____

Resolution: _____ **Disposition:** _____ **QA: N/C Closed:** _____ **Date:** _____

NCR:		WORK ORDER NON-CONFORMANCE (NCR)						
			Corrective Action Section B					
DATE	STEP	Description of NC Section A	Initial Chief Eng	Action Description Chief Eng	Sign & Date	Verification Section C	Approval Chief Eng	Approval QC Inspector

NOTE: Date & initial all entries

H:\FORMS\Quality Assurance\approved QA\NCRWO RevE

Picklist Print

Thursday, September 15, 2011 10:36:29 AM

Work Order ID: 73791

Parent Item: D2654-1

Parent Item Name: Web

Start Date: 9/15/2011 **Required Date:** 10/7/2011

Start Qty: 10.00 **Required Qty:** 10.00

Comments: IPP Rev:D□99.02.04□Fixed typo, Changed procedure□DM
IPP Rev:E 08-06-10 revE1 as per dwg DD verified by:EC

Component Item ID/ Item Name	Replacement Item ID	Mfg/ Purch	Bin Item	Primary Location	Last Location	Route Seq ID	Unit of Measure	Qty on Hand	Qty per Kit	Total Qty	Qty Issued	Date Issued	Status
D2600-5 ~~108~~ 080 Extrusion 'I Beam' thin		Manufactured	No			100	Each	131.0000	1	10			

Location		Loc Qty	Loc Code
HALL		48	
	47814	48	
LG		83	
	47814	83	

73867 10

X 11/10/13

Dart Aerospace Ltd

W/O:		WORK ORDER CHANGES					
DATE	STEP	PROCEDURE CHANGE	By	Date	Qty	Approval Chief Eng / Prod Mgr	Approval QC Inspector

Part No: _____ **PAR #:** _____ **Fault Category:** _____ **NCR:** Yes No **DQA:** _____ **Date:** _____

Resolution: _____ **Disposition:** _____ **QA: N/C Closed:** _____ **Date:** _____

NCR:		WORK ORDER NON-CONFORMANCE (NCR)						
DATE	STEP	Description of NC Section A	Corrective Action Section B			Verification Section C	Approval Chief Eng	Approval QC Inspector
			Initial Chief Eng	Action Description Chief Eng	Sign & Date			

NOTE: Date & initial all entries

H:\fFORMS\Quality Assurance\approved QA\NCRWO RevE

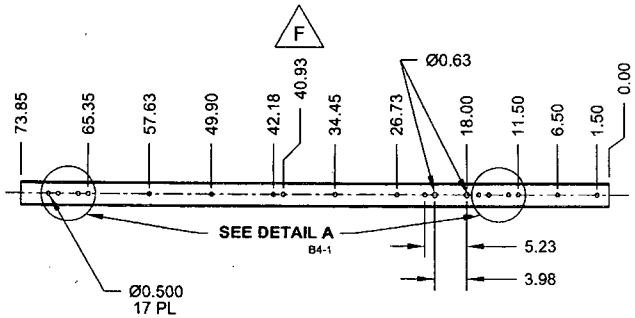

D2654-1 WEB

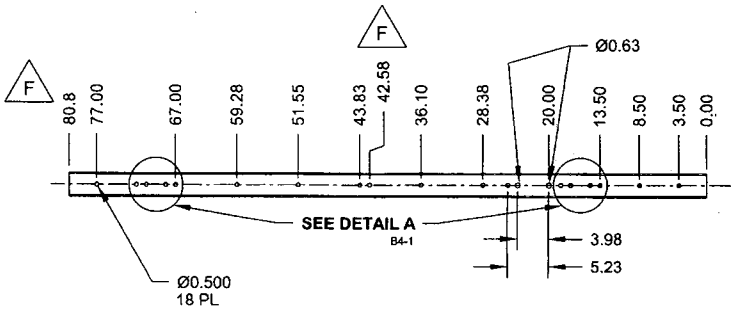

D2654-3 WEB

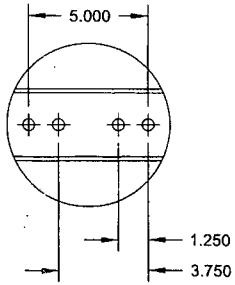

DETAIL A

C2-1
C3-1
C6-1
C8-1
D3-2
D6-2
B3-2
B6-2

RELEASED
2011-09-12

W073791

NOTES:

1) MAKE D2654-1/-3 FROM D2600-5-108 EXTRUSION, MAKE D2654-5/-7 FROM D2600-7-125 EXTRUSION
2) FINISH: CHEMICAL CONVERSION COAT PER DART QSI 005 4.1
3) TOLERANCES: PER DART QSI 018 UNLESS OTHERWISE NOTED
4) UNITS: INCHES UNLESS OTHERWISE NOTED
5) BREAK SHARP EDGES: 0.005 TO 0.010 MAX
6) IDENTIFICATION: IDENTIFY WITH P/N "D2654-X" PER QSI 044 6.1 (FINE POINT PERMANENT INK MARKER)
7) WEIGHT: D2654-1 = 2.2 lbs; D2654-3 = 2.4 lbs
D2654-5 = 4.8 lbs; D2654-7 = 5.8 lbs

REV.	DESCRIPTION	BY	DATE
F	ADDED ADDITIONAL HOLES ON -5/-7, 80.8 WAS 80.5, INCORPORATED DEO D2654-E-2	SC	11.05.05
E	CHANGE LENGTHS, REFORMAT	CP	04.05.26
D	GHW HOLES CHANGED TO Ø0.63	CP	98.01.15
C	CHANGED HOLE PATERN	CP	97.10.29
B	ALTER HOLE PATERN, 0.500 WAS 0.438	CP	97.06.26
A	NEW ISSUE	CP	97.03.25

DESIGN	CP	**DART AEROSPACE USA, INC** PORT HADLOCK, WA	
DRAWN	SC		
CHECKED		DRAWING NO.	REV. F
MFG. APPR.		D2654	SHEET 1 OF 2
APPROVED		TITLE	SCALE
DE APPR.		WEB	NTS
DATE	11.05.05		

Dart Aerospace Ltd

W/O:		WORK ORDER CHANGES					
DATE	STEP	PROCEDURE CHANGE	By	Date	Qty	Approval Chief Eng / Prod Mgr	Approval QC Inspector

Part No: _____ **PAR #:** _____ **Fault Category:** _____ **NCR:** Yes No **DQA:** _____ **Date:** _____

Resolution: _____ **Disposition:** _____ **QA: N/C Closed:** _____ **Date:** _____

NCR:		WORK ORDER NON-CONFORMANCE (NCR)						
DATE	STEP	Description of NC Section A	Corrective Action Section B			Verification Section C	Approval Chief Eng	Approval QC Inspector
			Initial Chief Eng	Action Description Chief Eng	Sign & Date			

NOTE: Date & initial all entries

H:\fFORMS\Quality Assurance\approved QA\NCRWO RevE

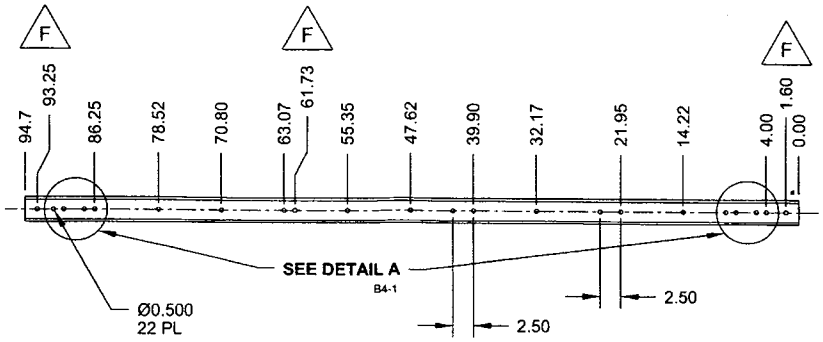

D2654-5 WEB

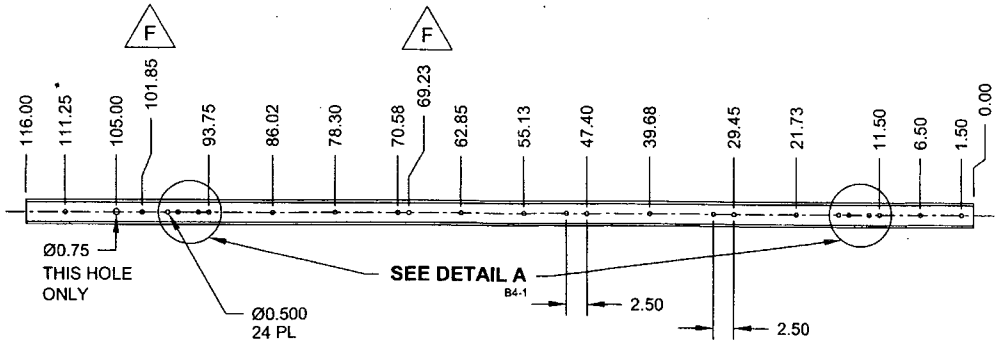

D2654-7 WEB

9

73791

RELEASED
2011-09-12

DESIGN	CP	**DART AEROSPACE USA, INC** PORT HADLOCK, WA	
DRAWN	SC		
CHECKED		DRAWING NO.	REV. F
MFG. APPR.		D2654	SHEET 2 OF 2
APPROVED		TITLE	SCALE
DE APPR.		WEB	NTS
DATE	11.05.05		

Dart Aerospace Ltd

W/O:		WORK ORDER CHANGES					
DATE	STEP	PROCEDURE CHANGE	By	Date	Qty	Approval Chief Eng / Prod Mgr	Approval QC Inspector

Part No: _____ **PAR #:** _____ **Fault Category:** _____ **NCR:** Yes No **DQA:** _____ **Date:** _____

Resolution: _____ **Disposition:** _____ **QA: N/C Closed:** _____ **Date:** _____

NCR:		WORK ORDER NON-CONFORMANCE (NCR)						
DATE	STEP	Description of NC Section A	Corrective Action Section B			Verification Section C	Approval Chief Eng	Approval QC Inspector
			Initial Chief Eng	Action Description Chief Eng	Sign & Date			

NOTE: Date & initial all entries

H:\fFORMS\Quality Assurance\approved QA\NCRWO RevE